SUPABIZZ

306-Y, Commercial, Phase III,
DHA, Lahore. +92 42 37186357
+92 300 8443004
www.supabizz.com



Jiangsu Wanbao Bridge Component Co. Ltd..



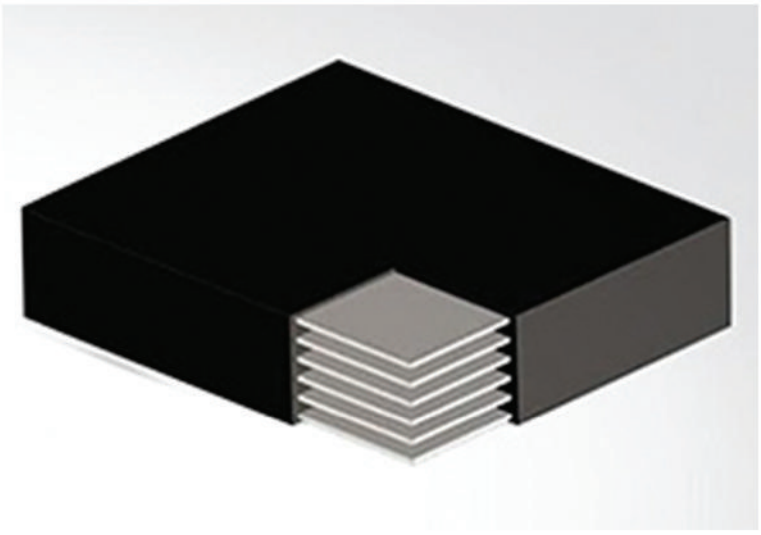

Pakistan Punjab MRS Specifications Expansion joints.

WB 江苏万宝 WANBAO

China Office

Address: Shanghai to Changshu Liantang Industrial Road No. 18 Eastern Jiangsu Province (Shang Town yuanyangqiao Industrial Zone), China
Tel:0512-52444268
E-mail:wanbao@cswanbao.com

Jiangsu Wanbao China at MRS Specifications Aluminum Alloy Flate Plate FP-Type Expansion joint

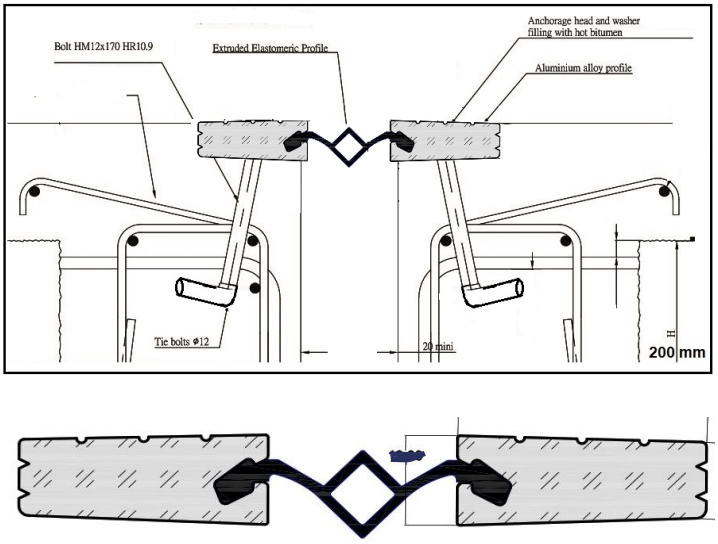



Extruded FP Profiles Description:

Alloy Aluminum Profile:

Belonging to the nosing family, these joints comprise two extruded aluminum alloy sections of 19mm top plate thickness supplied in three or six-meter lengths and laid opposite each other. A series of pairs of sections installed end-to-end form the joint seam. The metal elements are anchored to the main structure by fasteners.

Steel Anchorage:

The Anchorage system consists of L-Type MS studs that have been Bolted with Check Nuts at the spacing of 9 inches from Centre to Centre with the extruded profiles and the other end of the anchors are welded with steel bars exposed from the deck slab during installation for further reinforcement.

Elastomeric Profile:

A strip seal (bird tale shaped) is connecting the two adjacent profiles, Continuous sealing element prevents water from leaking through the expansion joint opening.

Salient Features:

Flate Plate FP-type expansion joint is the most preferred and internationally recognized. It has been mentioned and approved as per AASHTO and BS-EN Standards.

Extruded Alloy Aluminum Profiles Description:

Model:	**FP-50, FP-80, FP-100**	**Material Type:**	6063
Manufacture:	Jiangsu Wanbao Bridge Co. Ltd.	**Hardness:**	T6
Design by:	Mr. Chenming	**Manufacturing Type:**	Extrusion
Origin:	China	**Anchorage:**	MS Steel
Material:	Aluminum Alloy	**Anchorage Design:**	L Shape

Model	Movement Range	Top Plate Thickness	Nuts [center to center]	Flat plate	Saw tooth	Module Length
FP-50	25-50	19 mm	222 mm	Available	Available	2-3 LM
FP-80	40-80	19 mm	222 mm	Available	Available	2-3 LM
FP-100	50-100	19 mm	222 mm	Available	Available	2-3 LM

Jiangsu Wanbao China at MRS Specifications Aluminum Alloy Saw Tooth/ FingerST-Type Expansion joint

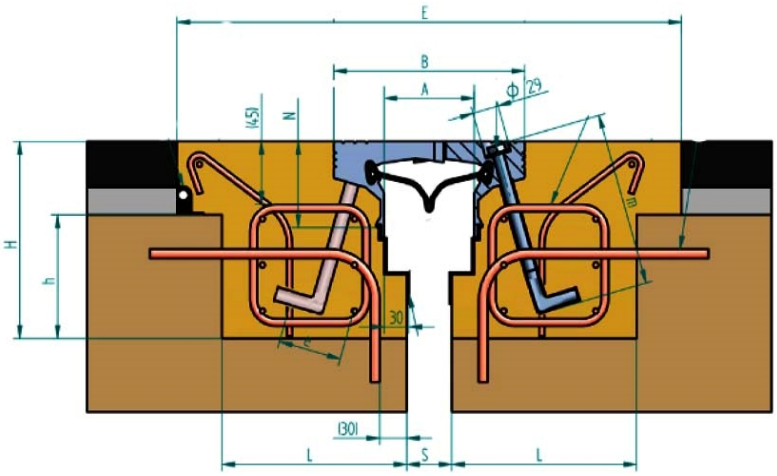



Extruded ST Profiles Description:

Alloy Aluminum Profile:

Belonging to the Finger type, these joints comprise two extruded aluminum alloy sections of 19mm top plate thickness supplied in two-meter lengths and laid opposite each other. A series of pairs of sections installed end-to-end form the joint seam. The metal elements are anchored to the main structure by fasteners.

Steel Anchorage:

The Anchorage system consists of L-Type MS studs that have been Bolted with Check Nuts at the spacing of 9 inches from Centre to Centre with the extruded profiles and the other end of the anchors are welded with steel bars exposed from the deck slab during installation for further reinforcement.

Elastomeric Profile:

A strip seal (bird tale shaped) is connecting the two adjacent profiles, Continuous sealing element prevents water from leaking through the expansion joint opening.

Salient Features:

Saw Tooth ST-type expansion joint is approved by Provincial Government (Punjab, KPK) as per the latest MRS (Market Rate System 2022). It has been mentioned and approved by renowned consultants of Pakistan such as NESPAK.

Extruded Alloy Aluminum Profiles Description:

Model:	**ST-50, ST-80, ST-100**	**Material Type:**	6063
Manufacture:	Jiangsu Wanbao Bridge Co. Ltd.	**Hardness:**	T6
Design by:	Mr. Chenming	**Manufacturing Type:**	Extrusion
Origin:	China	**Anchorage:**	MS Steel
Material:	Aluminum Alloy	**Anchorage Design:**	L Shape

Model	Movement Range	Top Plate Thickness	Nuts [center to center]	Flat plate	Saw tooth	Module Length
ST-50	25-50	19 mm	222 mm	Available	Available	2-3 LM
ST-80	50-80	19 mm	222 mm	Available	Available	2-3 LM
ST-100	50-100	19 mm	222 mm	Available	Available	2-3 LM

C P Jiangsu Wanbao China at MRS Specifications Aluminum Alloy Comb Plate CP Type Expansion Joint

Two Extruded Aluminum Alloy (grade 6061 T6) Expansion Joints top plate 30mm thick strip of specified width duly bolted @9" c/c max. with the bottom plate.

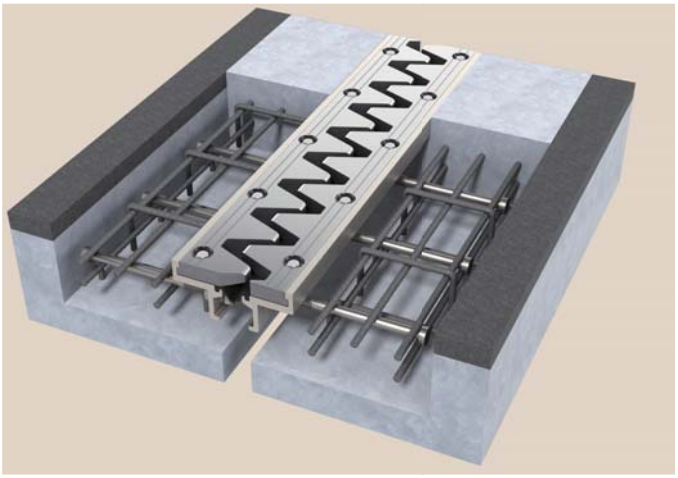

Sectional Diagram

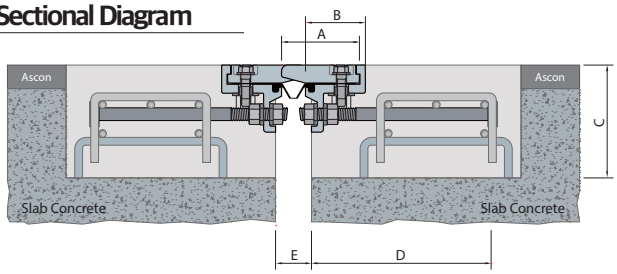

-EXTRUDED CP TYPE SPECIFICATIONS.

Type	GAP	Product Data			Blockout	Laying Gap (E)			BOLT (PER M)	Reinforcement .(kg)	Concrete (Per M)m²	Module length
	E	A	B	C	E	min	avg	max				
CP-50	50	124	99	200	300	20	45	70	M16*45,10EA	19.60	0.12	2-3 Lm
CP-60	60	129	99	200	300	20	50	80	M16*45,10EA	19.60	0.12	2-3 Lm
CP-80	80	139	99	200	300	20	60	100	M16*45,10EA	19.60	0.12	2-3 Lm
CP-100	100	175	125	200	300	20	70	120	M16*45,10EA	19.60	0.12	2-3 Lm
CP-130	130	190	125	200	300	20	85	150	M16*45,10EA	19.60	0.12	2-3 Lm

※ The product specifications are standard and subject to change with the specifications and characteristics of a bridge

※ The above product specification has an error range of ± 1~5mm depending on the specifications and characteristics

※ Movement range from 400 to 500mm is produced with steel

FOOTPATH FINISH



※ Additional costs incurred

INSTALLATION DETAIL

